INVERTER GENERATOR
OPERATOR`S MANUAL

BG2000iR



Зображення лише як зразок
(The picture is for reference only)

Table of Contents

SECTION 1: SAFETY INSTRUCTIONS AND WARNINGS 1
SECTION 2: CONTROLS AND FEATURES 5
2.1 Generator 5
2.2 Control Panel 6
2.3 Control Functions 7
SECTION 3: GETTING STARTED 11
3.1 Unpacking the Generator 11
3.2 Adding Engine Oil 11
3.3 Adding Fuel 13
3.4 Starting the Engine 14
3.5 Stopping the Engine 15
SECTION 4: ELECTRICAL CONNECTION 16
4.1 Capacity 16
4.2 Power Maintenance 16
4.3 Connecting Electrical Loads 16
4.4 Parallel Connection with 2 generator 17
4.5 Battery Charging 20
4.6 Wattage Reference Guide 21
SECTION 5: MAINTENANCE 23
5.1 Periodic Maintenance 23
5.2 Spark Plug Maintenance 24
5.3 Engine Oil Replacement 25
5.4 Air Filter Maintenance 26
5.5 Muffler Screen & Spark Arrestor Maintenance 27
5.6 Fuel Filter Maintenance 28
SECTION 6: STORAGE 29
6.1 Long Term Storage 29
SECTION 7: TROUBLESHOOTING AND SPECIFICATIONS 31
7.1 Troubleshooting Diagram 31
7.2 Fuel Filter Maintenance 32
SECTION 8: SPECIFICATIONS 33

SECTION 1:
SAFETY INSTRUCTIONS AND WARNINGS

IMPORTANT MANUAL INFORMATION

Important information is distinguished in this manual by the following notes.

⚠

Symbol Usage
This manual contains important information that you need to know and understand in order to assure YOUR SAFETY and PROPER OPERATION OF EQUIPMENT.The following symbols help you recognize this information. Please read the manual and pay attention to these sections.

WARNING INDICATE A CERTAINTY OR STRONG POSSIBILITY OF PERSONAL INJURY OR DEATH IF INSTRUCTIONS ARE NOT FOLLOWED.

CAUTION INDICATES A POSSIBILITY DAMAGE TO THE PRODUCTS IF INSTRUCTIONS ARE NOT FOLLOWED PROPERLY.

TIPS

TIPS GIVE HELPFUL INFORMATION

PLEASE READ AND UNDERSTAND THIS MANUAL COMPLETELY BEFORE OPERATING THE MACHINE

TIPS

Manufacturer continually seeks advancements in product design and quality. Therefore, wherein this manual contains the most current product information available at the time of printing, there may be minor variances between your product and this manual. if there is any question cancerning this manual, please consult dealer.

This manual should be considered a permanent part of this product and should remain with this product when resold.

Product and specifications are subject to change without notice.

SAFETY INFORMATION

FUEL IS HIGHLY FLAMMABLE AND POISONOUS

- Always turn off the engine when refueling.
- Never refuel while smoking or in the vicinity of an open flame.
- Take care not to spill any fuel on the engine or muffler when refueling.
- If you swallow any fuel, inhale fuel vapor, or allow any to get in your eye(s), see your doctor immediately. If any fuel spills on your skin or clothing,immediately wash with soap and water and change your clothes.
- When operating or transporting the machine, be sure it is kept upright. if it tilts, fuel may leak from the carburetor or fuel tank.

EXHAUST FUMES ARE POISONOUS

- Never operate this product in a closed area or it may cause unconsciousness and death within a short time. Always operate this product in a well ventilated outdoor area.

ENGINE AND MUFFLER MAY BE HOT

- When operating the generator place in a safe area away from pedestrians or children.
- Avoid placing any flammable materials near the exhaust outlet during operation.

·Keep the generator at least 1m(3 ft)from buildings or other equipment, or the product may overheat.

·Do not operate the product with a dust cover, or other objects covering it.

·When covering the generator, be sure to do so only after the engine and muffler have completely cooled down.

·Be sure to carry the generator only by its carrying handles.

·Do not place any obstacles on the generator.

TO PREVENT ELECTRIC SHOCK

- Never operate the product in rain or snow.
- Never touch the generator with wet hands or electrical shock can occur.



GROUNDING

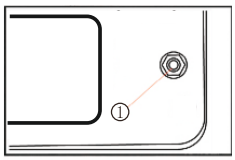

Properly ground generator to prevent electric shock.

- Connect the ground terminal of the generator to the the ground electrode buried in the ground.

WARNING NOTES

- Failure to properly ground the generator can result in electric shock.
- Be sure to always comply with electric loads.

CONNECTION

Before the generator can be connected to a building's electrical system , a licensed electrician must install an isolation (transfer)switch in the building's main fuse box. The switch is the connection point for generator power and allows selection of generator or main line power to the building .This will prevent the generator from charging the main power line (back feeding)when the main power supply has failed or has been turned off for line repair. backfeeding can electrocute or injure line maintenance personnel. Also , generator and building electrical system damage can occur when normal operating power returns if unit is used without an auto-switch.

DANGER

Always use proper approved electrical cords. Besure to comply with all electric codes.
Do not use electrical cords that are worn or damaged.
Always use GFCI(ground fault circuit interuptor) for damp locations.
Always use proper approved transfer switch to isolate generator from the electric panel.

SECTION 2:

Controls and Features

2.1 Generator

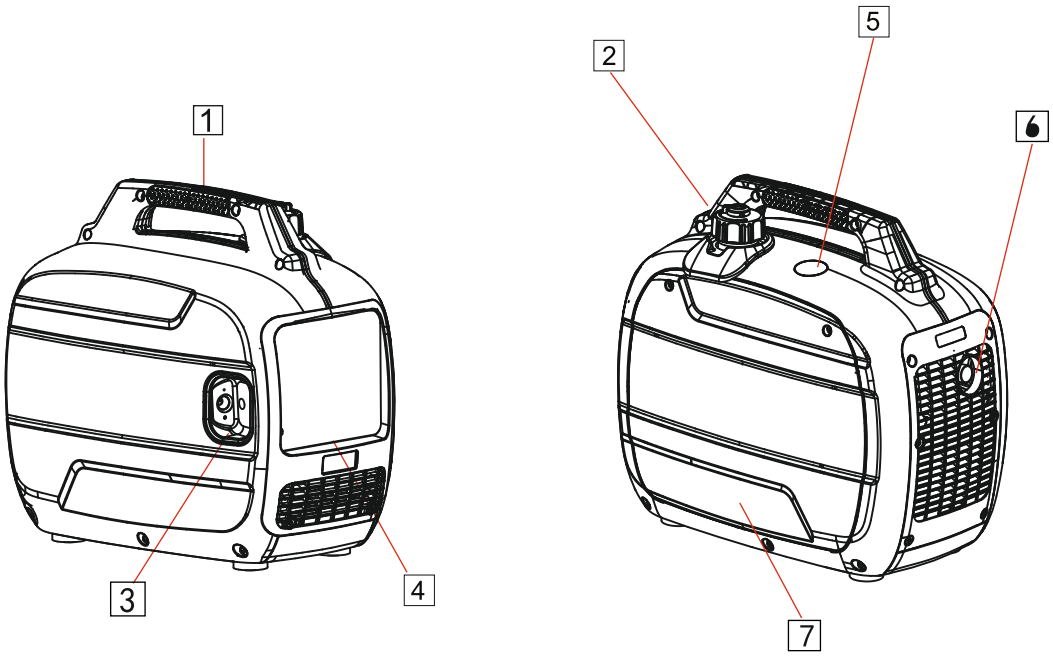

1	Carrying handle	5	The spark plug
2	Vented Gas Cap	6	Exhaust and Spark Arrestor
3	Recoil Starter	7	Oil filler cap
4	Control Panel		

2.2 Control Panel

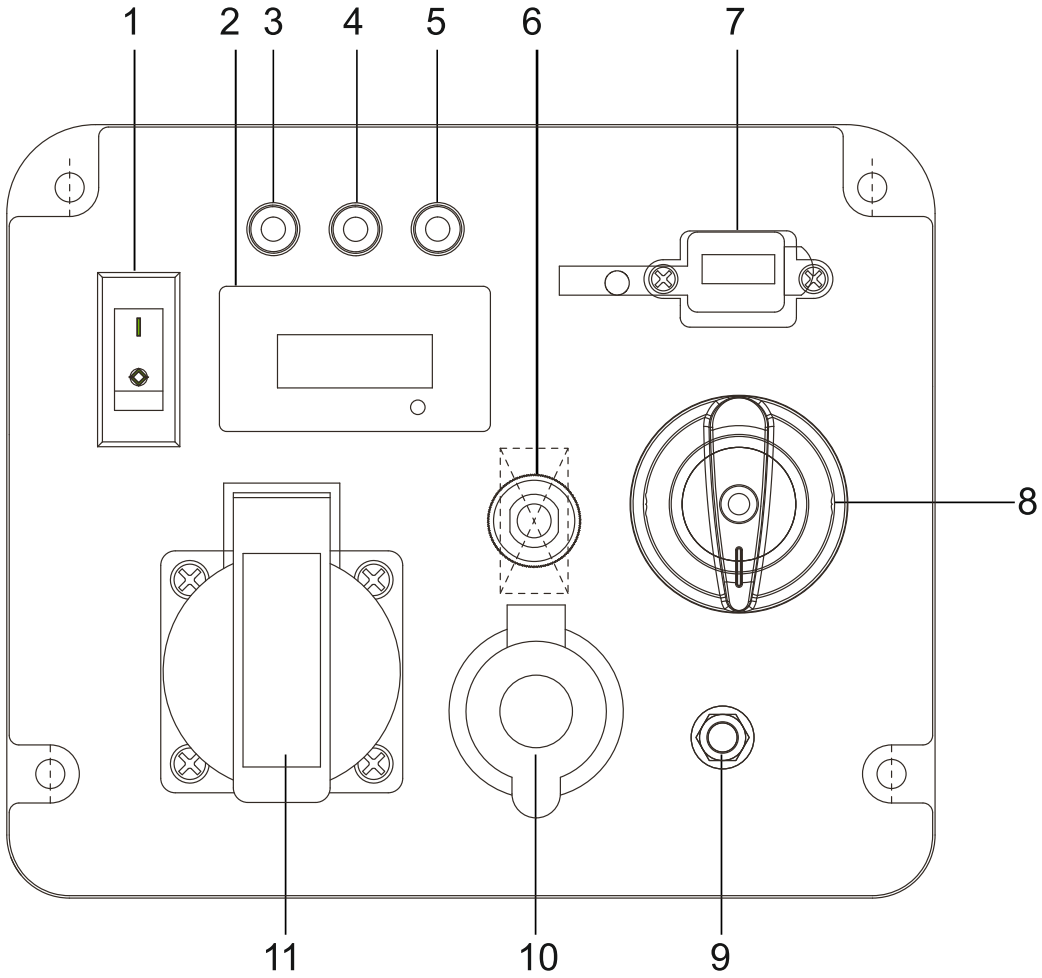

1.LOW IDLE

2.V.Hz.H

3.OUT PUT INDICATOR

4.OVERLOAD ALARM

5.LOW OIL ALERT

6.CIRCUIT PROTECTOR

7.5V USB

8.MULTI-SWITCH

9.GROUNDING

10.DC 12V

11.AC 220V

2.3 Control Functions

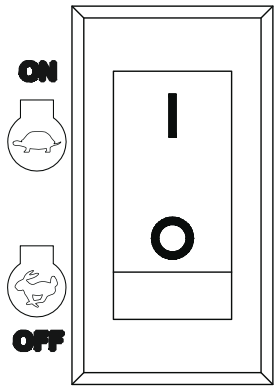

LOW IDLE MODE

LOW IDLE MODE

When the switch is in the **"ON"** position the switch controls the engine speed according to the connected electrical load. The results are better fuel consumption and less noise. When the switch is in the **"OFF"** position the engine runs at 5,000 rpm regardless of the electrical load.

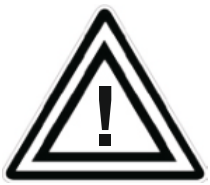

Note:

*The Throttle must be **"OFF"** when using electrical devices that require a large starting current, such as a compressor, pump, or refrigerator.*

LED Indicators

The LED Indicators assist in communicating status and functions of the unit .

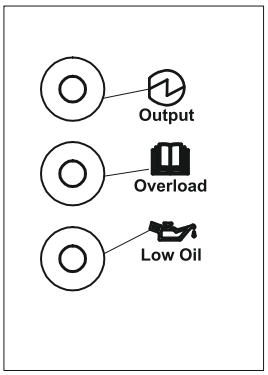

Output Indicator (Green)
The Output Indicator comes on when the engine starts and produces power.

Overload Alarm (Red)
The Overload Alarm comes on when a connected device requires more power than the generator is able to produce,

The Output Indicator (Green) will go off and the Overload Alarm (Red) will stay on, but the engine will continue to run

CAUTION: Do not overload the generator

Low Oil Alarm (Red)
When the engine oil falls below the required level the Low Oil Alarm will come on and the engine will stop automatically. The engine will not restart until oil is added to the unit to bring it up to the appropriate level.

To Reset the Generator

1. Turn off any connected electric devices and stop the engine.
2. Reduce the total wattage of connected electric devices within the rated output.
3. Use in proper ventilated areas. Maintain at least 3ft of clearance on all sides for adequate cooling.
4. After checking, restart the engine. (refer to part 3.4 in this manual for how to start).



Note:

The Overload Alarm may come on for a few seconds when first using electrical devices that require a large starting current, such as a compressor, pump, or refrigerator. This is normal and not a malfunction.

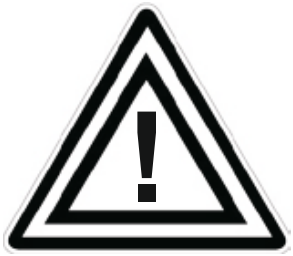

Note:

When starting the unit, if the Low Oil Alarm light flickers and the engine will not start, you will need to add engine oil before attempting to restart the engine.



Note:

Generator should only be operated on a level surface. DO NOT operate the generator on loose ground or obvious inclines. The low oil shutdown feature may be prematurely activated in these cases causing the engine to not start.

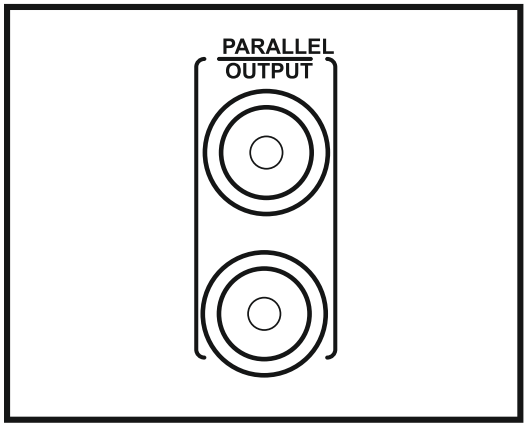

Parrallel Output (Optional)

Two generators can be connected to increase output.
Put parallel wire into the socket first, then start the two greater wattage as the normal process.
Note: put the connection wire into the right Sockets (Please refer to 4.4 for how to connect properly) .

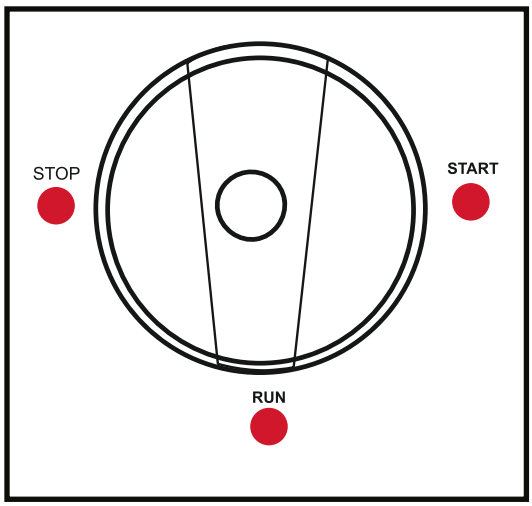

Multi-Switch

The multi-switch control fuel valve, choke and engine switch.
When starting the generator, rotate the multi-switch counter clockwise from OFF to START position, then pull recoil cord quickly to start. After started, rotate the switch to RUN position

NOTE:
To shut off generator rotate Multi-Switch clockwise to OFF position and hold until generator turns off.

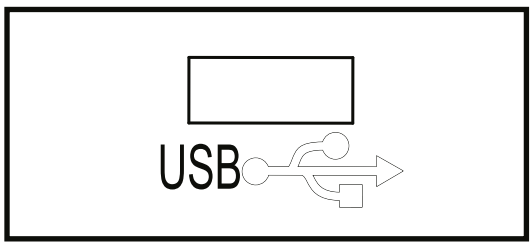

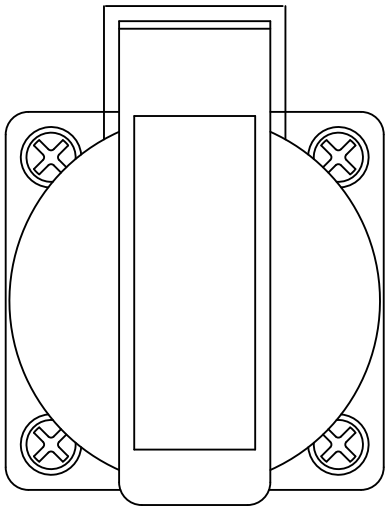

220V AC Outlet

The Outlet is used to power 220V Single Phase 50Hz loads requiring up to 1600W continuous power.

220V AC twist lock receptacle may be used to supply electrical power when parallel connection.

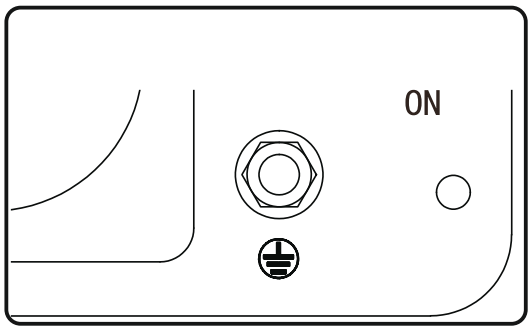

Ground Terminal

Properly ground generator to prevent electrical shock.
Connect the ground terminal of generator to ground electrode buried in the ground.

SECTION 3:

Getting Started

3.1 Unpack the Generator

Remove the generator from its packaging.

WARNING!
PACKAGING IS FLAMMABLE!
DO NOT ATTEMPT TO ADD FUEL TO THIS UNIT BEFORE REMOVING IT FROM PACKAGING.

Inspect the generator to ensure that no damage has occurred in shipping or handling. If the unit appears to be damaged, DO NOT add fuel or attempt to start the generator.

Check to ensure that you received the following items:

- Generator
- Oil Funnel
- Plug

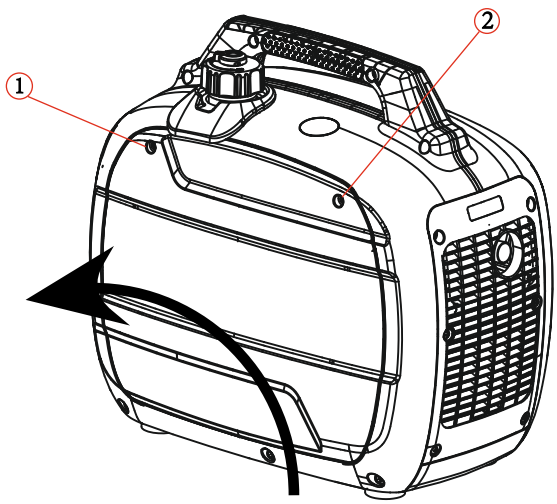

Figure 1

3.2 Adding Engine Oil

The generator has been shipped without engine oil.
DO NOT add fuel or start the engine before adding engine oil.

IN ORDER TO ADD MOTOR OIL YOU WILL NEED TO REMOVE THE SIDE PANEL FROM THE UNIT(Figure1).

Using a #2 Phillips-head screwdriver remove screws ① and ② (seen in figure 1) and lift up and away to remove the side panel.

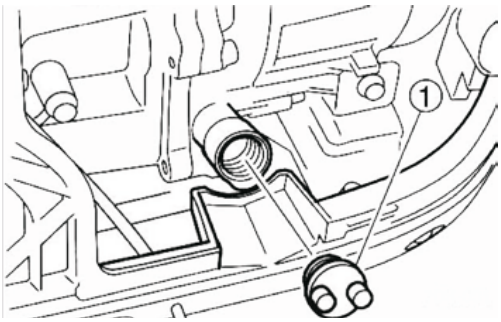

Figure 2

Place the generator on a level surface. DO NOT tilt the generator while adding oil. It can cause you to overfill the oil and/or cause the oil to leak into areas in which it is not intended.
Remove the oil filler cap ① (seen in figure 2)

Using the funnel (provided) fill with 0.42 quart of SAE 10W-30 or 10W-40 (provided) (see figure 3). See figure 4 for proper oil level ①.

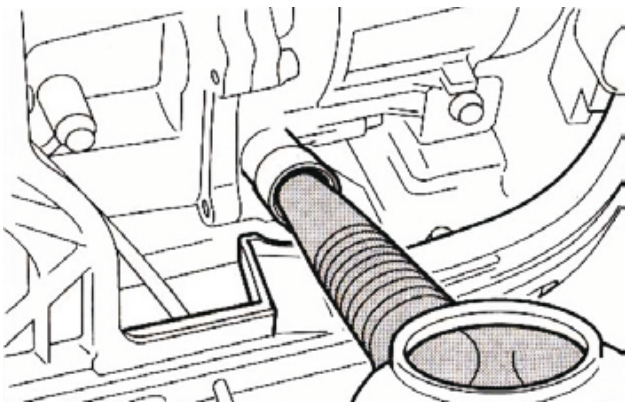

Figure 3

Replace oil filler cap and secure side panel with screws.

Recommended engine oil:

A. YAMALUBE 4 (10W-40) SAE10W-30 or 10W-40
B. SAE #30
C. SAE#20
D. SAE#10W

Recommended engine oil grade:
API Service SE type or higher
Engine oil quantity:
0.4L (0.42 US qt，0.35 Imp qt)

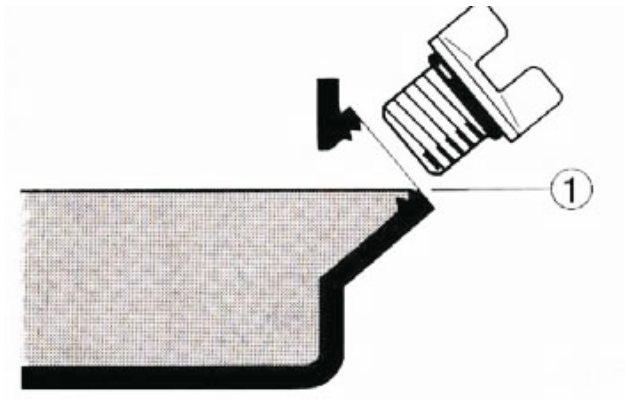

Figure 4

3.3 Adding Fuel

DO NOT overfill the tank, otherwise it may overflow when the fuel warms up and expands.



Note:

For safety reasons, once fuel has been added to this unit it cannot be returned to the place of purchase.

1. Use clean, fresh, regular unleaded fuel with a minimum octane rating of 85.
2. DO NOT mix oil with fuel.
3. Clean area around the fuel cap.
4. Remove the fuel cap.
5. Be sure that the fuel strainer is in place.
6. Slowly add fuel to the tank.
7. Do not exceed the red marker position of the fuel filter.
8. Screw on the fuel cap and wipe away and spilled fuel.

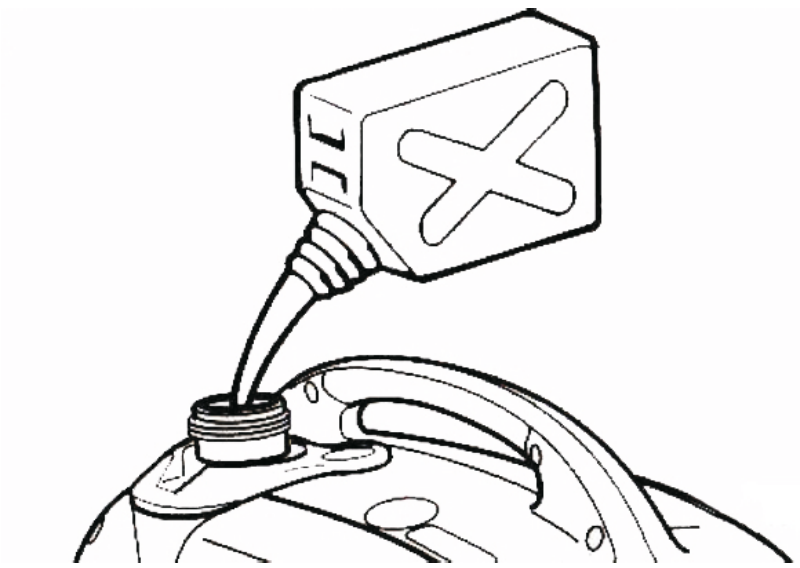

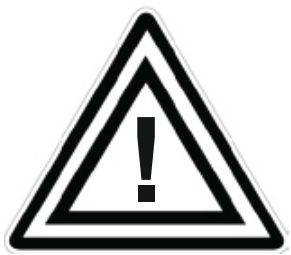

Note:

Use only unleaded gasoline.
The use of leaded gasoline will cause severe damage to internal engine parts.

After filling with fuel, make sure the fuel tank cap is tightened securely.

3.4 Starting the Engine

OPERATE THE ENGINE IN A WELL VENTILATED AREA.
DO NOT connect any electrical devices to the outlets on the generator before starting the engine.

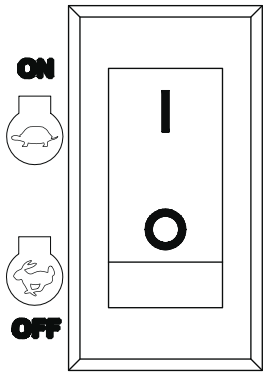

1. Turn the **LOW IDLE MODE** switch "OFF" You may turn the Economy Throttle switch to "ON" once the engine is started and a steady idle is achieved. (below 0°(32°F)/5mins, below 5°C(41°F)/3mins.)

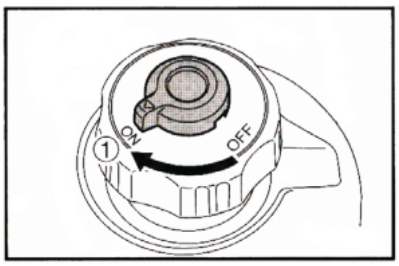

2. While holding the fuel tank cap so that it will not move, turn the air vent knob to "ON".

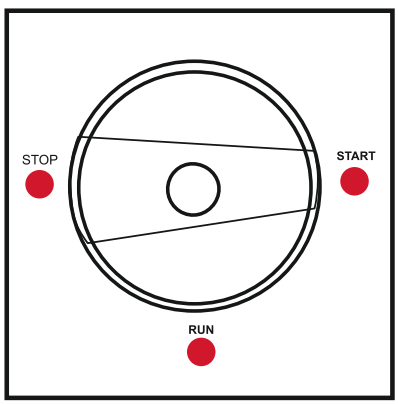

3.Turn the multi-switch to the "START" position.

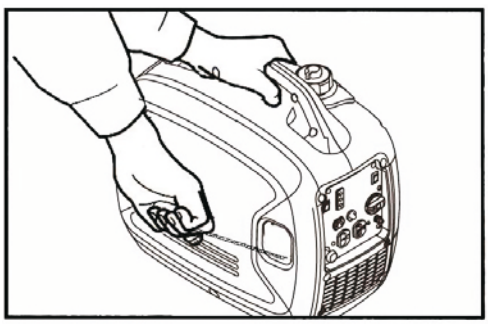

4. Grasp the carrying handle firmly to prevent the generator from falling over when pulling the recoil starter.

5. Pull slowly on the recoil starter until it is engaged and then pull it briskly.

6. After the engine starts, warm up the engine until the engine does not stop when the choke knob is returned the original position.

3.5 Stopping the Engine

Before stopping the engine turn off and disconnect any electronic devices attached to the generator.

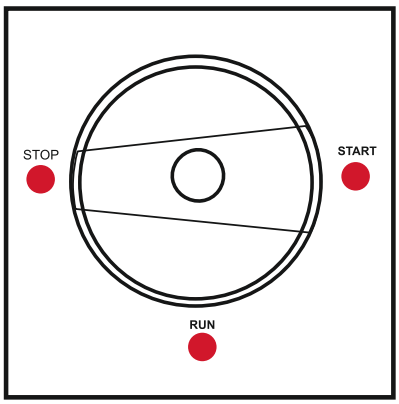

1.Turn the multi-switch to the “OFF” position.

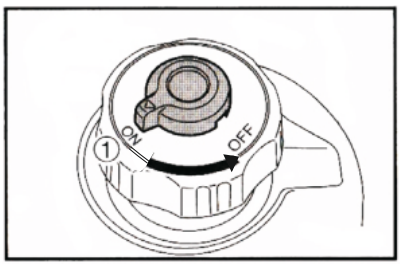

2. While holding the fuel tank cap so that it will not move, turn the air vent knob to “OFF”.

SECTION 4:
Electrical Connection

4.1 Capacity
Follow these simple steps to calculate the running and starting watts necessary for your purposes.

See Section 4.5 for Wattage Reference Guide.

1. Select the electrical devices you plan on running at the same time.
2. Total the running watts of these items. This is the amount of power you need to keep your items running.
3. Identify the highest starting wattage of all devices identified in step 1
    a. Add this number to the number calculated in step 2
    b. Surge wattage is the extra burst of power needed to start some electric driven equipment. Following the steps listed under “Power Management” will guarantee that only one device will be starting at a time.

4.2 Power Management
Use the following formula to convert voltage and amperage to watts:
Volts x Amps = Watts

To prolong the life of your generator and attached devices, follow these steps to add electrical load:

1. Start the generator with no electrical load attached.
2. Allow the engine to run for several minutes to stabilize.
3. Plug in and turn on the first item. It is best to attach the item with the largest load first.
4. Allow the engine to stabilize.
5. Plug in and turn on the next item.
6. Allow the engine to stabilize.
7. Repeat steps 5-6 for each additional

4.3 Connecting Electrical Loads
1. Let the engine stabilize and warm up a few minutes after starting.

2. Prior to powering tools and equipment, make sure the generator's rated voltage, and amperage capacity (220 AC @ 7 AMPs, 5 V DC @1.5AMPs) is adequate to supply all electrical loads that the unit will power. If powering exceeds the generator's capacity, it may be necessary to group one or more of the tools and/or equipment for connection to a separate generator.
3. Once the generator is running, simply connect the power cords of 220 volt AC powered tools and equipment into the 220 volt AC dual outlets.

4. DO NOT connect 3-phase loads to the generator.
5. DO NOT connect 60 Hz loads to the generator.
6. DO NOT overload the generator.

4.4 Parallel Connection within 2 Generators (Optional)

Performance : Allows you to increase the output by connecting two generators together. By using the parallel connection wires provided.

Attention: Be sure generators are powered off and without load when connecting the parallel wires.

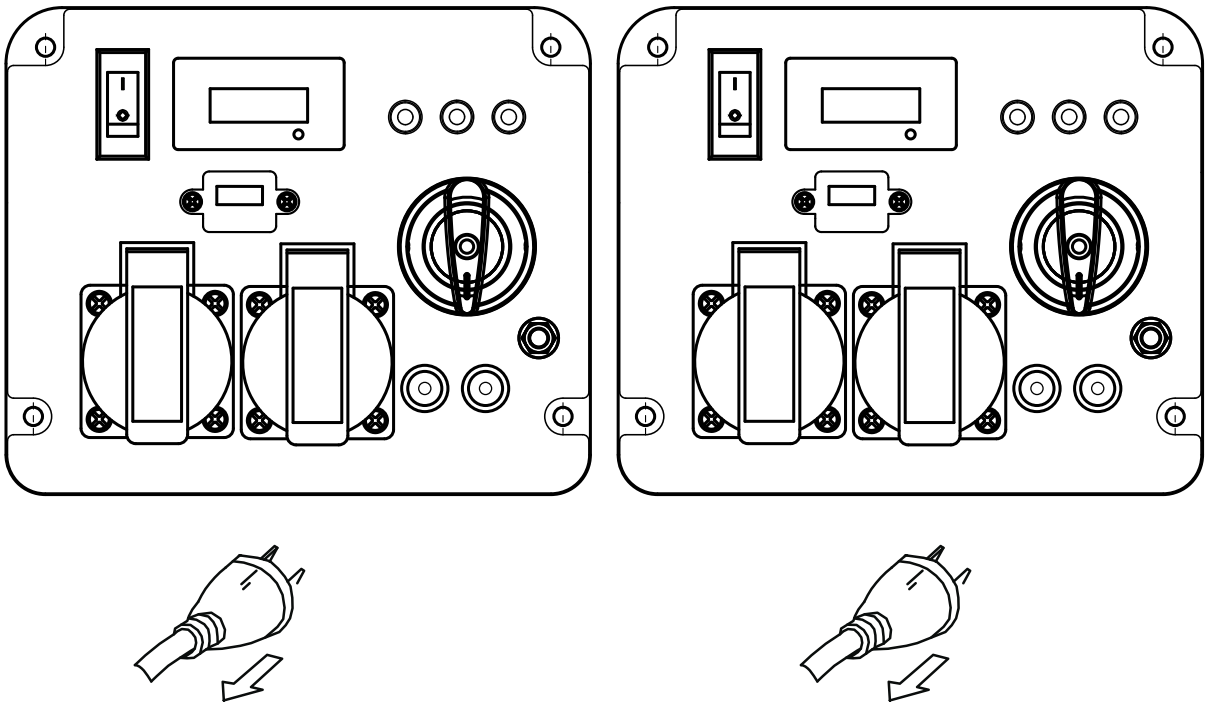

2. put the parallel connection wire 1 and 2 into the parallel connection sockets 3 and 4.

Attention: Grounding Wire must be properly connected.

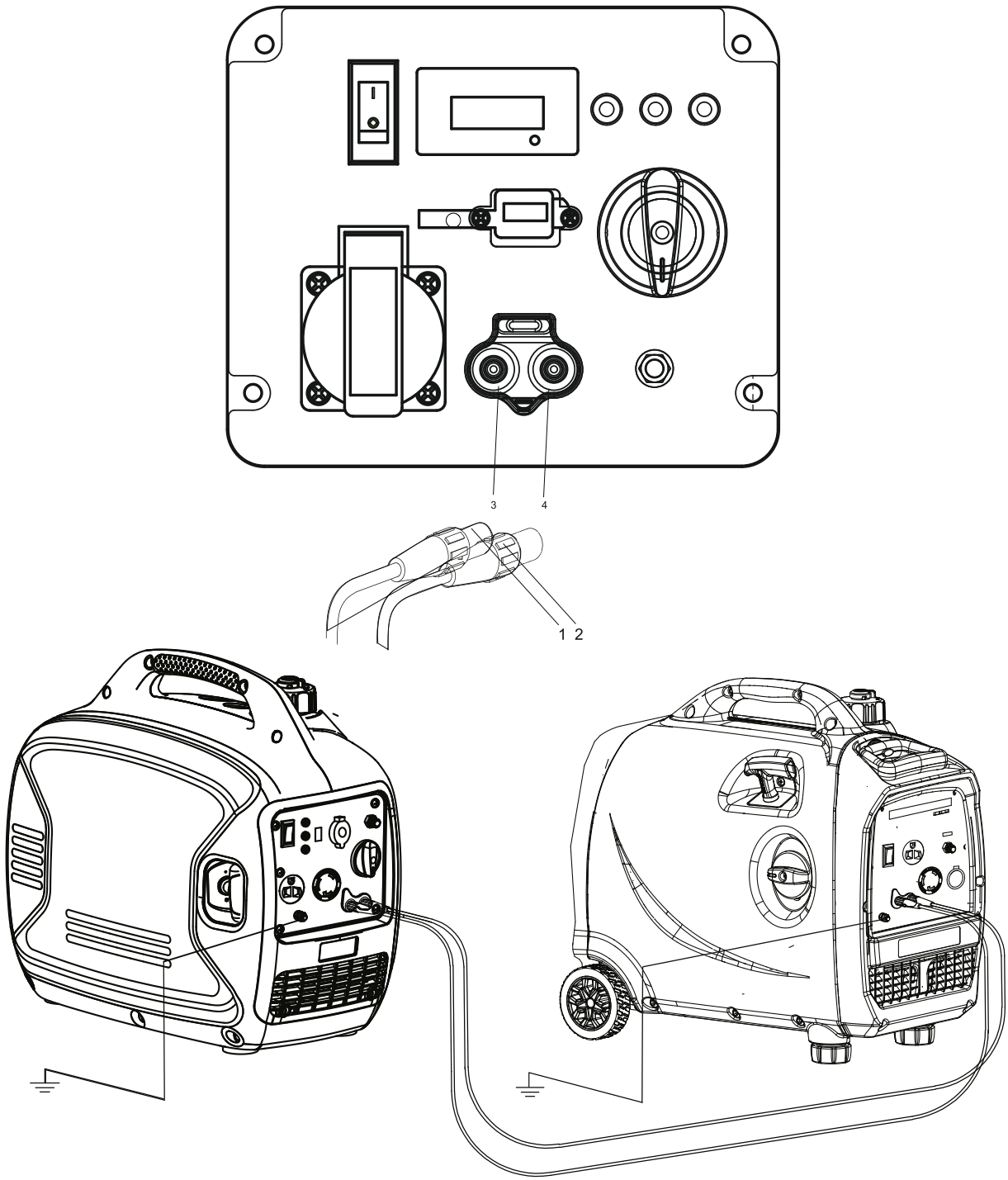

3. Start 2 sets of inverter generators. The starting operation is as the same as normal process(refer on manual book starting parts)

Attention: Please make sure the parallel connection wires have been put into the parallel connection sockets properly. If not connected properly, starting inverter generator could be damaged.

4.The load plugs can now be plugged into socket 6.

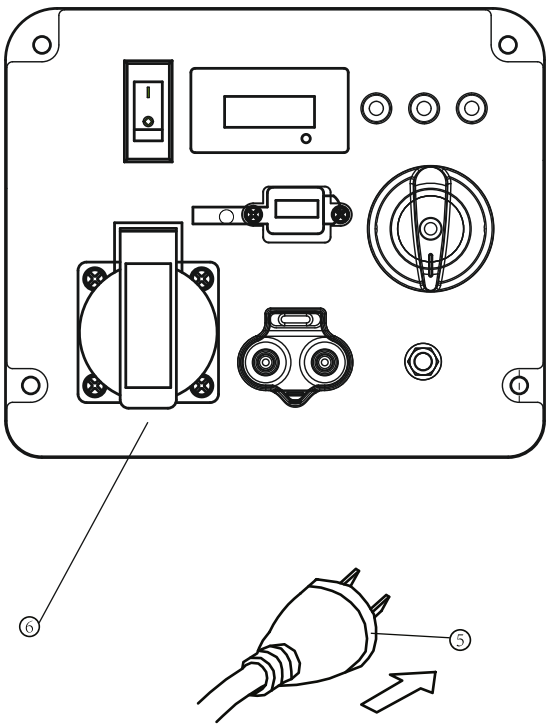

Warning:

Only 2 sets of same brand inverter generator can be parallel connected.

Only use same brand parallel connecting wire.

Make sure to connect the correct parallel wire into the correct socket.

Connect the parallel wires when generator is off.

Parallel wires are not necessary when only one generator is being used.

Manual book carefully before operation.

4.5 Battery Charging

Start the engine first and allow it to reach idle before connecting the generator to the battery. Battery Charging is performed using the 12V DC outlet only.

1. Be sure the Throttle switch is turned **"OFF"** while charging batteries.
2. Be sure to connect the red battery charger lead to the positive (+) battery terminal, and connect the black lead to the negative (-) battery terminal. DO NOT reverse these positions.
3. Connect the battery charger leads to the battery terminals securely so that they do not disconnect due do engine vibration or other disturbances.
4. Charge the battery by following the instructions in the owner's manual for the battery.
5. The DC Circuit Breaker will turn **"OFF"** automatically if the current exceeds rated output.
6. To restart charging the battery, turn the DC protector on by pressing its button to **"ON"**
7. Refer to the owner's manual for the battery to determine charging times.

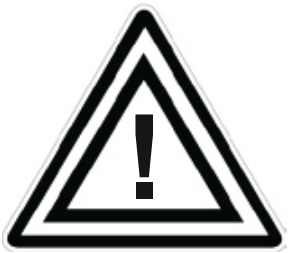

Note: *Never start or stop the generator with electrical devices plugged in or turned on.*

4.6 Wattage Reference Guide

Item	Running Watts	Starting Watts
Essentials		
Light Bulb	100	100
Refrigerator/Freezer	1200	2400
Sump Pump	600	1800
Well Pump 1HP	2000	4000
Water Heater	4000	
Security System	180	
AM/FM Radio	300	
Garage Door Opener ½ HP	500	600
Battery Charger 12V	110	
Heating and Cooling		
Air Conditioner 12000 BTU	1700	2500
Fan	300	600
Furnace Fan 1/3 HP	1200	2000
Home Appliances		
Microwave	1000	
Electric Range – One Element	1500	
Electric Skillet	1250	
Coffee Maker	1500	
Clothes Washer	1200	
Entertainment		
CD/DVD Player	100	
Stereo Receiver	450	
Television 27”	500	
PC with 15” Monitor	800	
Job Site		
Belt Sander 3”	1000	1500
Bench Grinder 6”	700	1500
Circular Saw	1500	1500
Compressor 1 ½ HP	1000	1000
Edge Trimmer	500	500
Hand Drill ½”	1000	1000
Paint Sprayer	600	1200
Table Saw	2000	2000

These are estimates only. Check your tool or appliance for exact wattage requirements. The wattages listed are based on estimated wattage requirements.

For exact wattages, check the data plate or owner's manual on the item you wish to power using the generator.

Operating voltage and frequency requirement of all electronic equipment should be checked prior to plugging to plugging them into this generator. Damage may result if the equipment is not designed to operate within a +/- 10% voltage variation, and +/- 3 Hz frequency variation from the generator specification ratings.

Your Power Needs

Tool or Appliance	Running Watts	Starting Watts
1.		
2.		
3.		
4.		
5.		
Total Running Watts		
	Highest Starting Watts	
Total Running Watts + Highest Starting Watts		

SECTION 5:

Maintenance

5.1 Periodic Maintenance

Periodic inspection, adjustment and lubrication will keep your generator in the safest and most efficient condition possible.

Item	Routine	Prior to use	Every	
			6mos. or 100hrs.	12mos. or 300hrs.
Spark Plug	• Check condition • Clean and replace if necessary		•	
Fuel	• Check fuel level and leakage.	•		
Fuel hose	• Check fuel hose for cracks or damage • Replace if necessary.	•		
Engine oil	• Check oil level in engine.	•		
	• Replace*		•*	
Air Filter Element	• Check condition • Clean		•	
Muffler Screen	• Check Condition • Clean or replace if necessary		•	
Spark Arrestor	• Check Condition • Clean or replace if necessary		•	
Fuel Filter	• Check Condition • Clean or replace if necessary			•

* Initial replacement of the engine oil is after one month or 20 hours of operation.

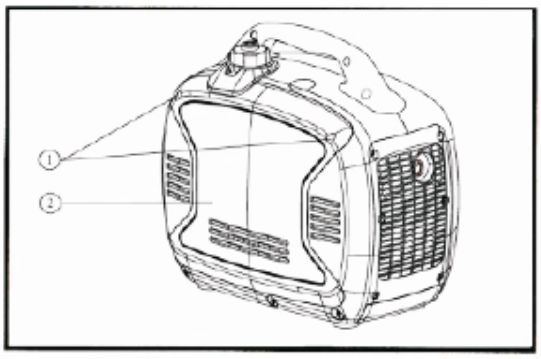

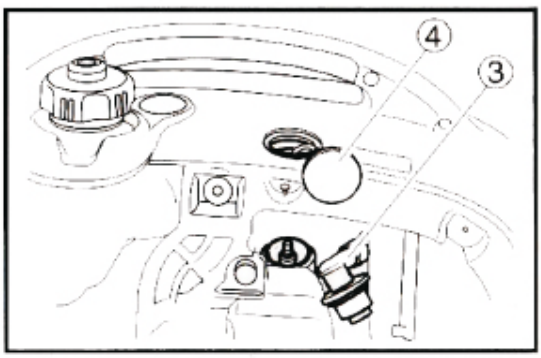

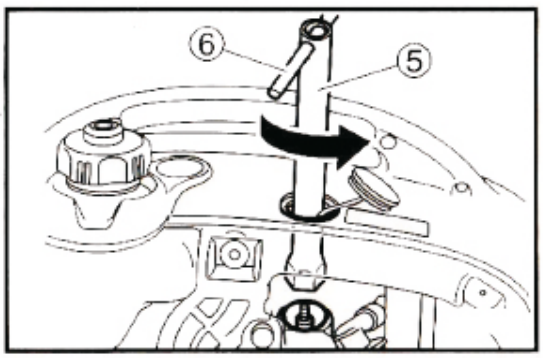

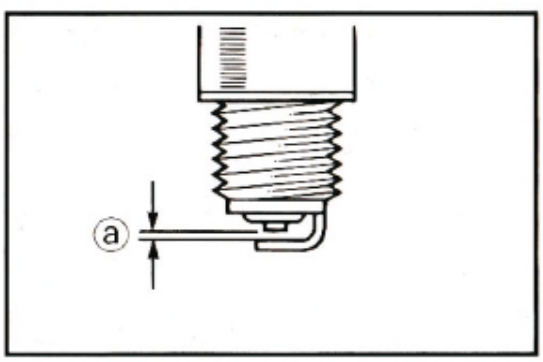

5.2 Spark Plug Maintenance

Spark plug inspection
The spark plug is an important engine component and should be checked periodically.

1. Remove the screws ① and then remove the cover ②.
2. Remove the spark plug cap ③ and access cap ④
3. Insert the tool ⑤ through the hole in the outside of the cover.
4. Insert the handlebar ⑥ into the tool ⑤ and turn it counterclockwise to remove the spark plug.
5. Check for discoloration. The carbon porcelain insulator around the center electrode of spark plug should be a Medium-to-light tan color.
6. Check the spark plug type and gap. The spark plug gap should be measured with a wire thickness gauge and, if necessary, adjusted to specification.
7. Install spark plug, spark plug cap, cover and screws.

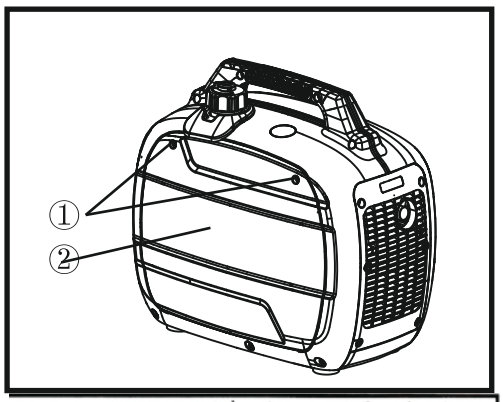

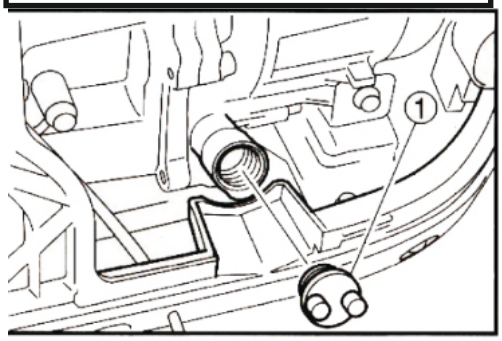

5.3 Engine Oil Replacement

Initial replacement of the engine oil is after one month or 20 hours of operation.

1. Place the generator on a level surface and warm up the engine for several minutes. Then stop the engine and turn the Fuel Petcock knob to **"OFF"** and the Fuel Tank Cap Air Vent knob to **"OFF"**.

2. Remove the screws ① and then remove the cover ②.

3. Remove the oil filler cap.

4. Place an oil pan under the engine. Tilt the generator to drain the oil completely.

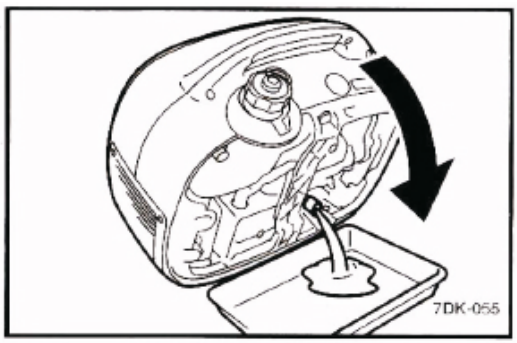

5. Return the generator to a level surface.

Note: *DO NOT tilt the generator when adding engine oil. This could result in overfilling and damage to the engine.*

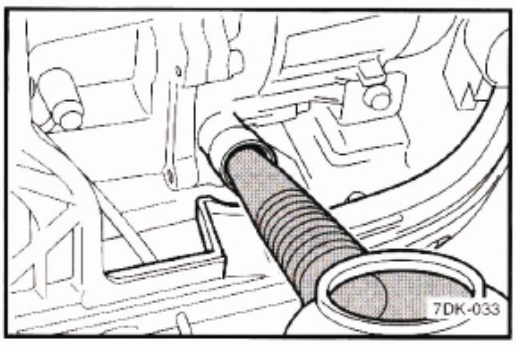

6. Add engine oil to the upper level as seen in the diagram ①.

Recommended engine oil:
- YAMALUBE 4 (10W-40),SAE 10W-30 or 10W-40
- SAE#30
- SAE#20
- SAE10W

Recommended engine oil grade:
API Service SE type or higher
Engine oil quantity:
0.4L (0.42US qt, 0.035 Imp qt)

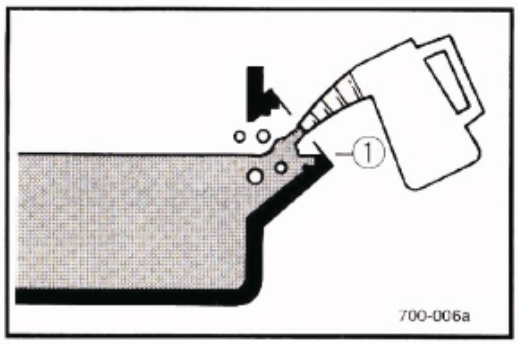

7. Install oil filler cap, cover, and screws.

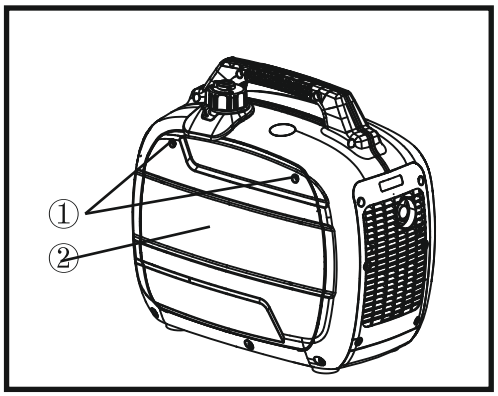

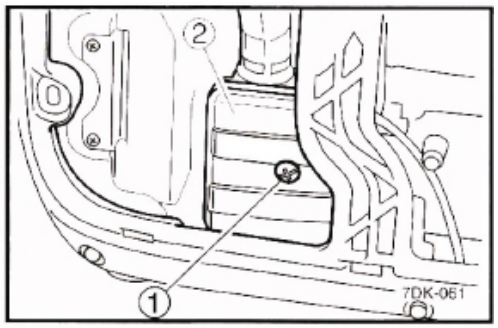

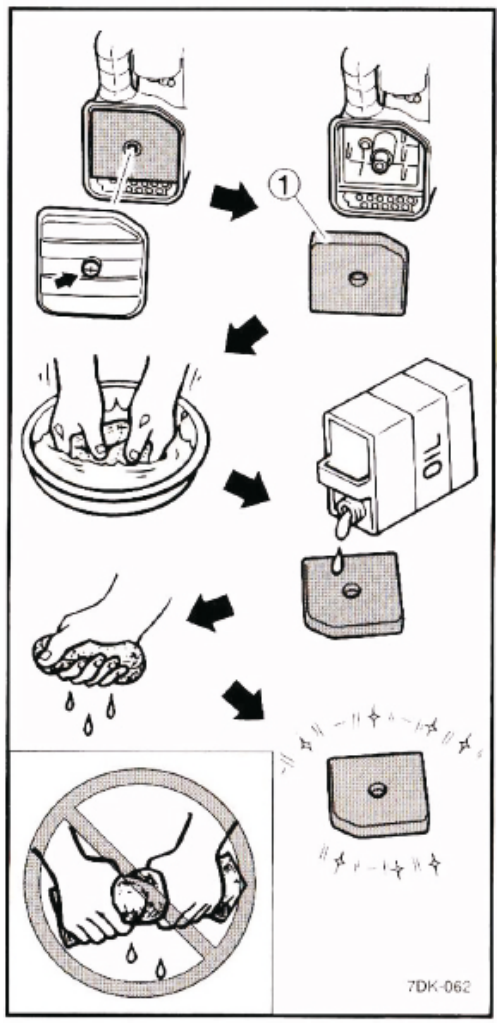

5.4 Air Filter Maintenance

Should be performed every 6 months or 100 hours. The air filter may need to be cleaned more frequently when using in unusually wet or dusty areas.

1. Remove the screws ① and then remove the cover ②.
2. Remove the screws ① and then remove the air filter case cover ②.
3. Remove the foam element ①.
4. Wash the foam element in solvent and dry it.
5. Oil the foam element and squeeze out excess oil. The foam element should be wet but not dripping.

NOTE: *Do not wring out the foam element when squeezing it. This could cause it to tear.*

6. Insert the foam element into the air filter case. Be sure the foam element sealing surface matches the air filter so there is no air leak.

NOTE: Never operate the engine without foam element.

7. Install air filter case cover, cover, and screws.

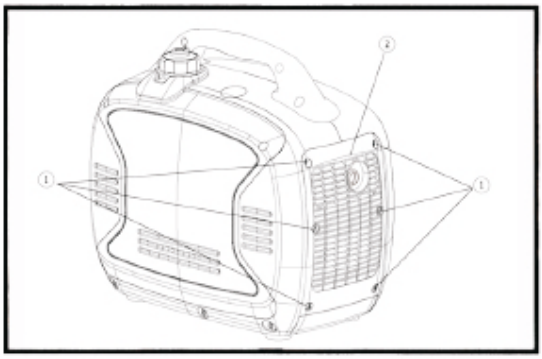

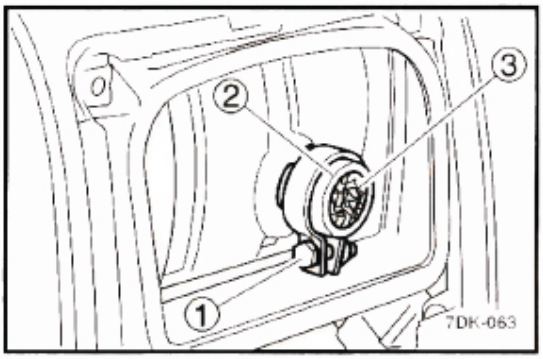

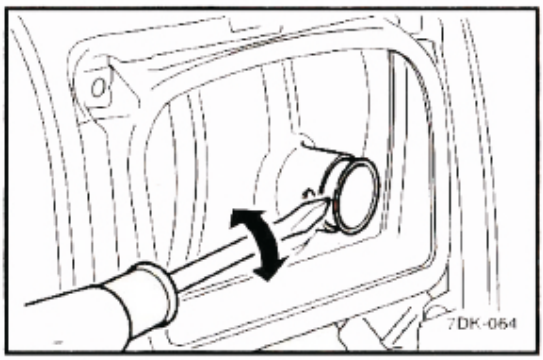

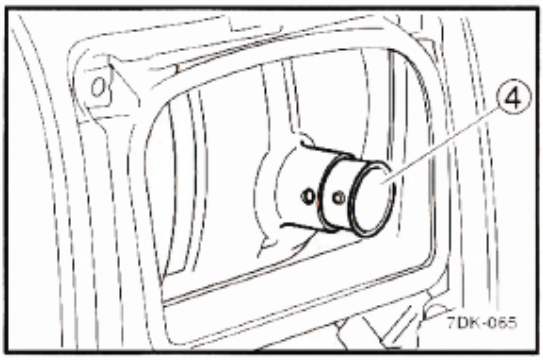

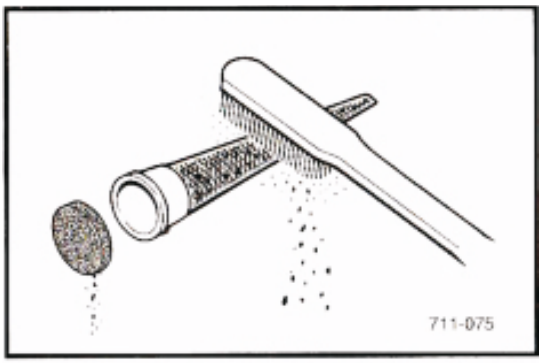

5.5 Muffler Screen and Spark Arrestor Maintenance

Should be performed every 6 months or 100 hours. The air filter may need to be cleaned more frequently when using in unusually wet or dusty areas.

1. Remove the screws ① and then remove the cover ②.
2. Loosen the bolt ① and the remove the muffler cap ②, the muffler screen ③ and spark arrester ④
3. Remove the carbon deposits on the muffler screen and spark arrester using a wire brush. Use wire brush lightly to avoid damaging the muffler screen or spark arrestor.
4. Check the muffler screen and spark arrester replace them if damaged.
5. Install the spark arrester.
6. Install the muffler cap.
7. Install the cover and tighten the screws.

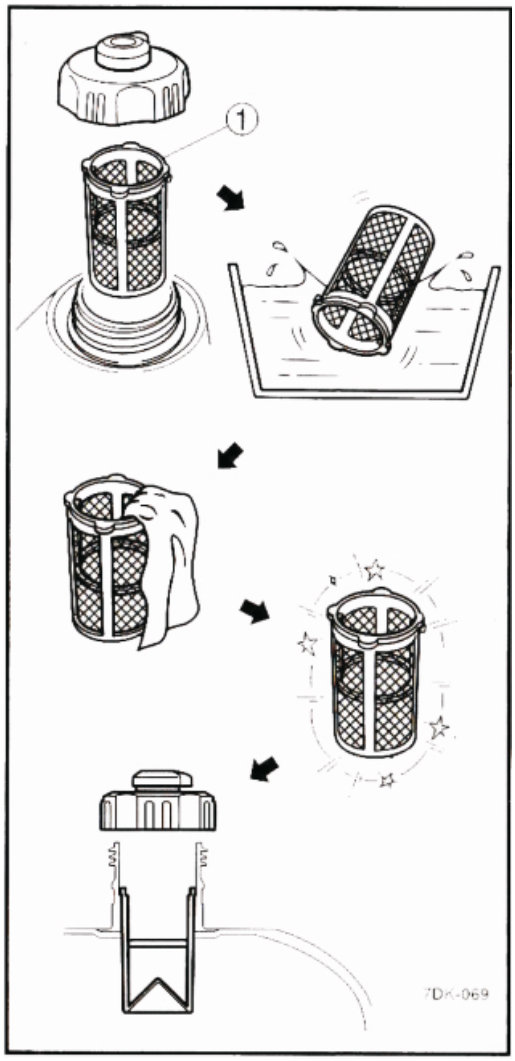

5.6 Fuel Filter Maintenance

Should be performed every 12 months or 300 hours.

1. Remove the fuel tank cap and filter ①.
2. Clean the filter with gasoline.
3. If damaged, replace it.
4. Wipe the filter and install it.
5. Install the fuel tank cap.

WARNING!

GASOLINE IS FLAMMABLE. DO NOT perform this maintenance while smoking or near an open flame.

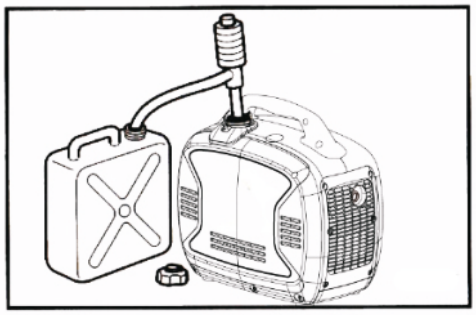

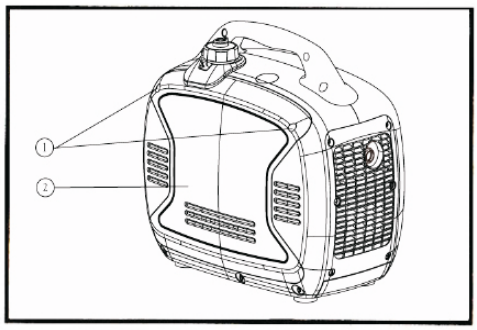

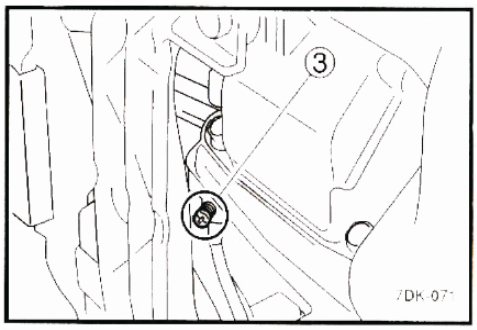

SECTION 6:

Storage

6.1 Long Term Storage

Long term storage of your generator will require some preventive procedures to guard against deterioration.

1. Drain the fuel

Remove the fuel tank cap. Extract the fuel tank into an approved gasoline container using a commercially available hand siphon. Then install the fuel tank cap.

WARNING!

GASOLINE IS FLAMMABLE. DO NOT perform this maintenance while smoking or near an open flame.

Immediately wipe off spilled fuel with a clean, dry, soft cloth, since fuel may deteriorate painted surfaces or plastic parts.

2. Start the engine and let it run until it stops. Duration of the running engine depends on the amount of the fuel left in the tank.

3. Remove the screws ①, and then remove the cover ②.

4. Drain the fuel from the carburetor by loosening the drain screw ③ on the carburetor float chamber.Tighten the drain screw.

5. Remove the dipstick and drain the engine oil.Then tighten the dipstick.

6. Install the cover and tighten the screws.

7. Turn the fuel tank cap air vent knob to “OFF”

8. Store the generator in a dry,well-ventilated place, with the cover placed over it.

Engine

Perform the following steps to protect the cylinder, piston ring, etc. from corrosion.

1. Remove the spark plug, pour about one table-spoon of SAE 10W-30 or 20W-40 motor oil into the spark plug hole and reinstall the spark plug. Recoil start the engine by turning over several times (with ignition off) to coat the cylinder walls with oil.
2. Pull the recoil starter until you feel compression. Then stop pulling. (this prevents the cylinder and valves from rusting).
3. Clean exterior of the generator and apply a rust inhibitor.
4. Store the generator in a dry, well-ventilated place, with the cover placed over it.
5. The generator must remain in a vertical position when stored, carried, or operated.

SECTION 7:

Troubleshooting and Specifications

7.1 Troubleshooting Diagram

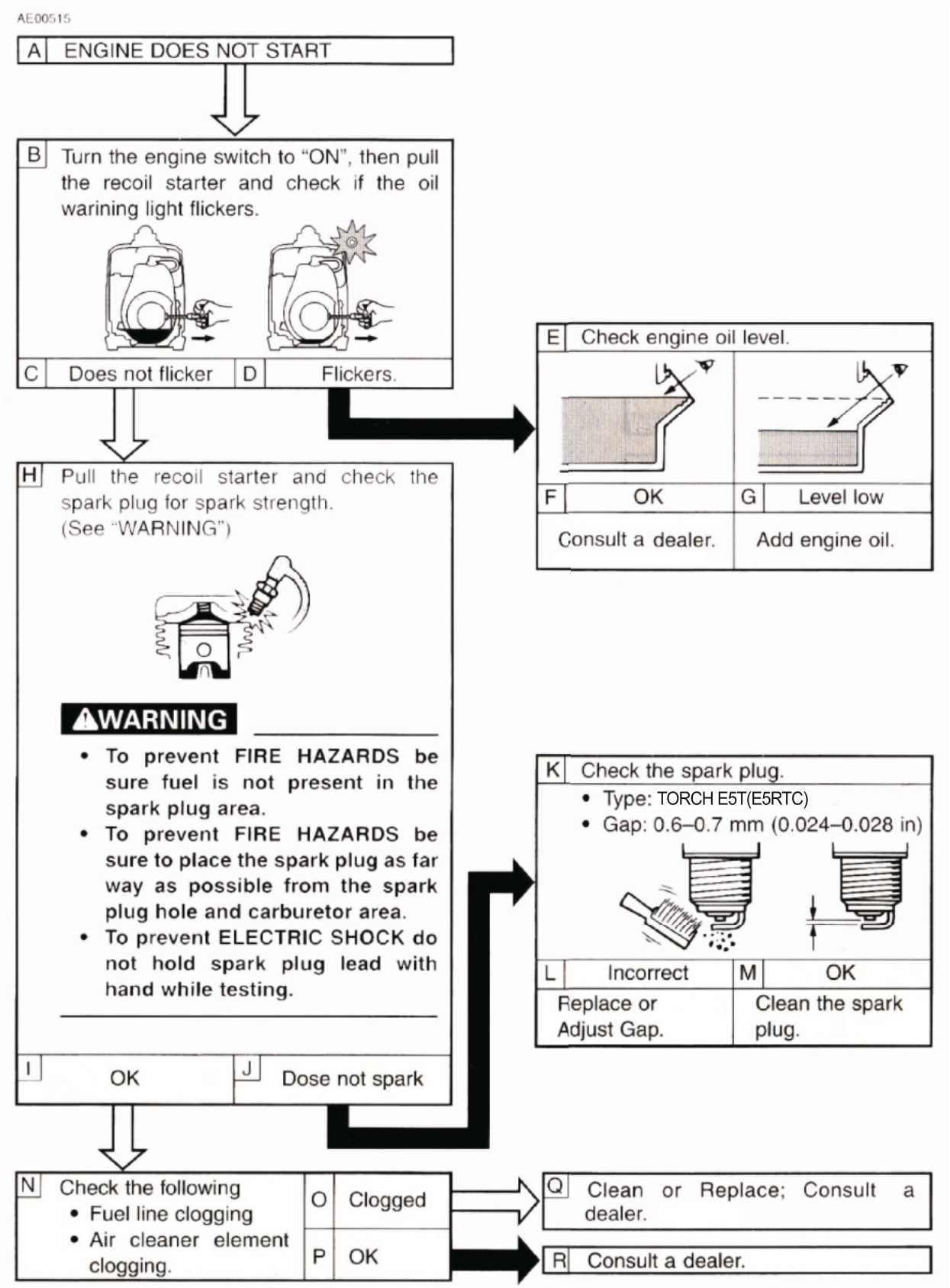

7.2 Fuel Filter Maintenance

Use this section to troubleshoot common errors.

Engine won't start

Fuel systems: No fuel supplied to combustion chamber

- No fuel in tank…..supply fuel.
- Fuel in tank……..Fuel tank cap air vent knob and fuel cock knob to **"ON"**.
- Clogged fuel line……clean fuel line.
- Clogged carburetor….clean carburetor.

Engine oil system insufficient

- Oil level is low….add engine oil.

Electrical systems

- Engine switch to **"ON"** and pull the recoil starter. Poor spark
- Spark plug dirty with carbon or wet…Remove carbon or wipe spark plug dry.
- Faulty ignition system….Consult a service center.

Generator won't produce power

- Safety device (DC protector) to **"OFF"** ….press the DC protector to **"ON"**
- Safety device (AC) to **"OFF"**….stop the engine, then restart.

SECTION 9 :

Specifications	
Model	**BG2000iR (SC2000i)**
Engine Type	4-Stroke OHV Air Cooled Single Cylinder
Engine Displacement (cc)	80cc
Rated Power	1600W
Max Power	2000W
Rated Frequency	50Hz
Rated Voltage	220V
Rated Current	7.0A
Run Time	6.5hrs at 1/2 load
Receptacles (qty.)	220V AC ; 5V DC (1)
Net Weight	21KG
Noise Level (dB)	60dB @ 1/4 Load
Fuel Type	Unleaded gasoline
Gallon	1.0
Oil Type	SAE 10W-30
Start Type	Recoil
Packing Dimensions	545x330x510mm